REVISIONS			
REV.	DESCRIPTION	DATE	APPROVED
B	ECN 10132	10/02/2019	MMARTINEZ

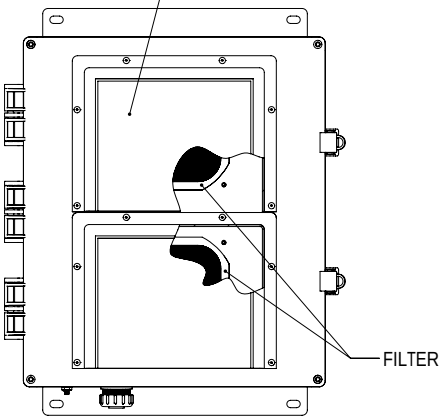

VIEW B-B

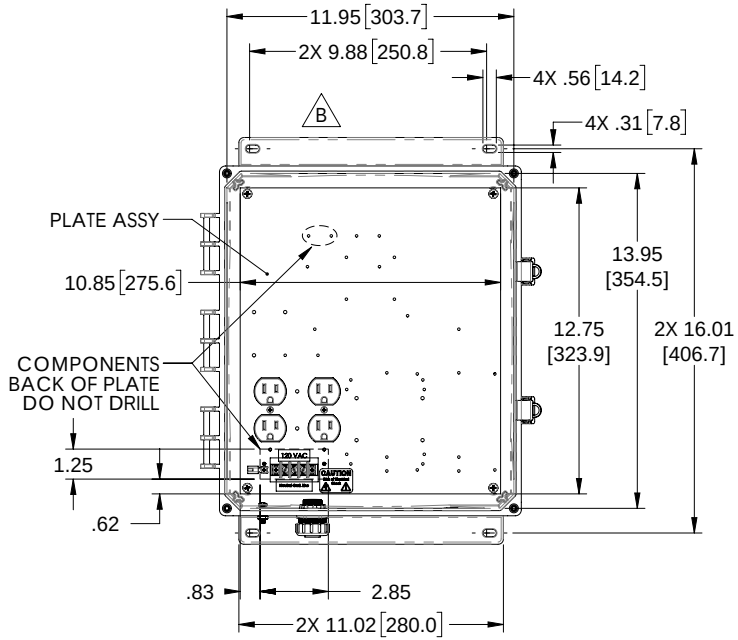

LID NOT SHOWN IN THIS VIEW FOR CLARITY

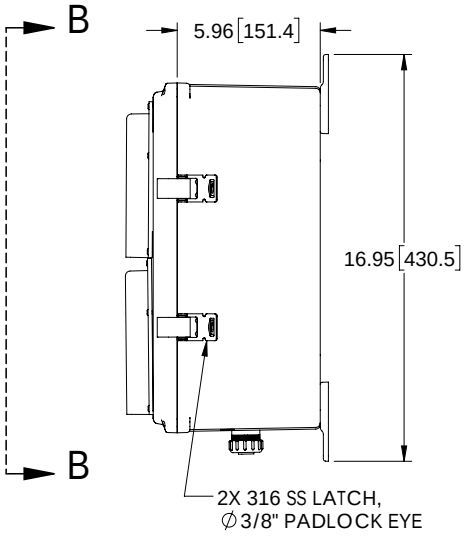

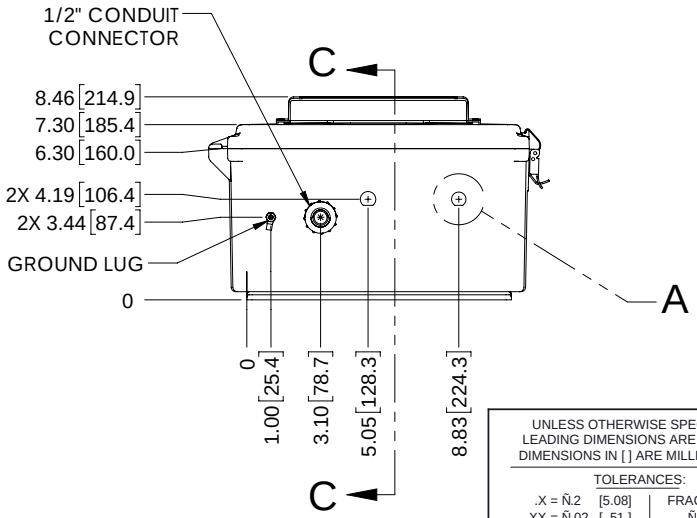

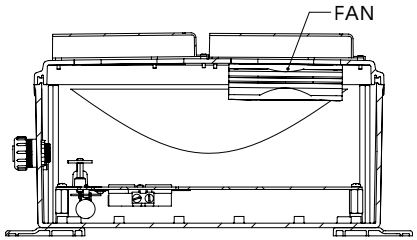

SECTION C-C

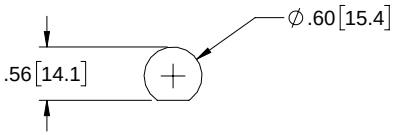

DETAIL A
2 PLACES

UNLESS OTHERWISE SPECIFIED
LEADING DIMENSIONS ARE INCHES
DIMENSIONS IN [ ] ARE MILLIMETERS

TOLERANCES:

.X = Ñ.2 [5.08]
.XX = Ñ.02 [.51]
.XXX = Ñ.005 [.13]

FRACTIONS Ñ1/32
ANGLES Ñ1Á

OVERALL CABLE LENGTH (L) TOLERANCES:

L Ò12 [305] = +1 [25] / -0
12 [305] < L Ò60 [1524] = +2 [51] / -0
60 [1524] < L Ò120 [3048] = +4 [102] / -0
120 [3048] < L Ò300 [7620] = +6 [152] / -0
300 [7620] < L = +5%L / -0

ALL DIMENSIONS SHOWN ARE FOR REFERENCE ONLY.

an INFINITE brand
50 High Street, West Mill, 3rd Floor, Suite #30
North Andover, MA 01845 USA.
Phone: 1.800.341.5266 b 1.978.682.6936
Fax: 1.978.689.9484
www.L-com.com be-mail: CustomerService@L-com.com

THIRD-ANGLE PROJECTION

THE INFORMATION AND DESIGN IN THIS DOCUMENT IS THE PROPERTY OF L-COM GLOBAL CONNECTIVITY. ALL RIGHTS RESERVED.

SHEET 1 OF 1

SCALE N/A

SIZE	CAGE CODE	DRAWN BY	PART NUMBER	REV
A	43321	DZINN	NBPC141206-10F	B

THESE COMMODITIES, TECHNOLOGY OR SOFTWARE WERE EXPORTED FROM THE UNITED STATES IN ACCORDANCE WITH THE EXPORT ADMINISTRATION REGULATIONS. DIVERSION CONTRARY TO U.S. LAW PROHIBITED.

T-Rev.C