| REVISIONS | | | |
|---|---|---|---|
| REV. | DESCRIPTION | DATE | APPROVED |
| A | INITIAL RELEASE | 08/23/21 | MMARTINEZ |

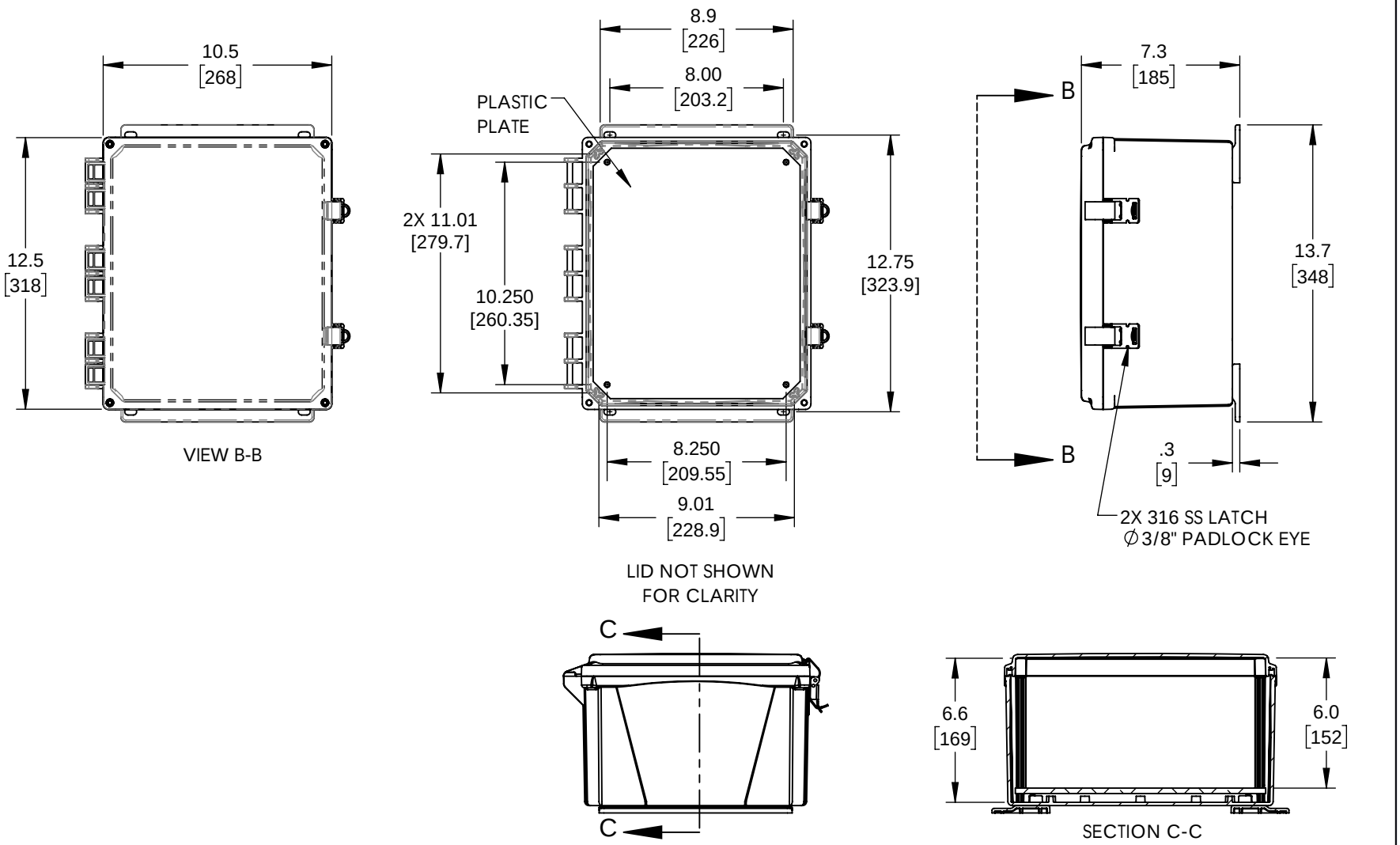


UNLESS OTHERWISE SPECIFIED
LEADING DIMENSIONS ARE INCHES
DIMENSIONS IN [ ] ARE MILLIMETERS

TOLERANCES:

| | | |
|---|---|---|
| .X = Ñ.2 | [5.08] | FRACTIONS |
| .XX = Ñ.02 | [ .51 ] | Ñ1/32 |
| .XXX = Ñ.005 | [ .13 ] | ANGLES Ñ1Á |

CABLE LENGTH (L) TOLERANCES:

L Ò12 [305] = +1 [25] / -0
12 [305] < L Ò60 [1524] = +2 [51] / -0
60 [1524] < L Ò120 [3048] = +4 [102] / -0
120 [3048] < L Ò300 [7620] = +6 [152] / -0
300 [7620] < L = +5%L / -0

ALL DIMENSIONS SHOWN
ARE FOR REFERENCE ONLY.


L-com™
an INFINITE brand
50 High Street, West Mill, 3rd Floor, Suite #30
North Andover, MA 01845 USA.
Phone: 1.800.341.5266 b 1.978.682.6936
Fax: 1.978.689.9484
Website: www.L-com.com
E-mail: CustomerService@L-com.com


THIRD-ANGLE PROJECTION


THE INFORMATION AND DESIGN IN THIS DOCUMENT IS THE PROPERTY OF L-COM GLOBAL CONNECTIVITY. ALL RIGHTS RESERVED.


SHEET 1 OF 1

SCALE N/A

| SIZE | CAGE CODE | DRAWN BY | ITEM NO. | REV |
|---|---|---|---|---|
| A | 43321 | BPUCHASKI | NBPC121006-KIT01 | A |


THESE COMMODITIES, TECHNOLOGY OR SOFTWARE WERE EXPORTED FROM THE UNITED STATES IN ACCORDANCE WITH THE EXPORT ADMINISTRATION REGULATIONS. DIVERSION CONTRARY TO U.S. LAW PROHIBITED.


T-Rev.D