REVISIONS			
REV.	DESCRIPTION	DATE	APPROVED
A	INITIAL RELEASE	09/29/21	MMARTINEZ

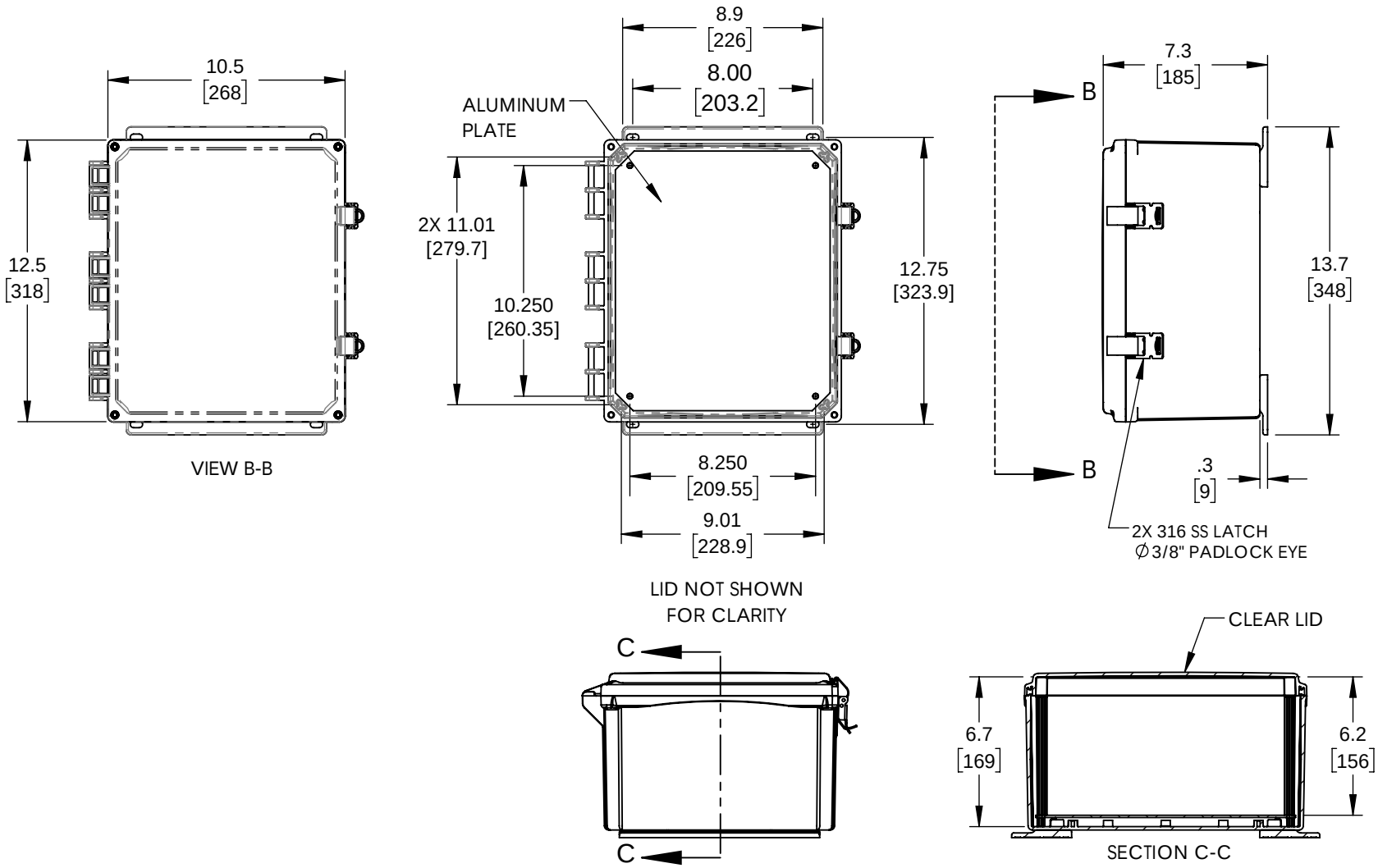

UNLESS OTHERWISE SPECIFIED
LEADING DIMENSIONS ARE INCHES
DIMENSIONS IN [ ] ARE MILLIMETERS

TOLERANCES:

.X = Ñ.2	[5.08]	FRACTIONS
.XX = Ñ.02	[.51]	Ñ1/32
.XXX = Ñ.005	[.13]	ANGLES Ñ1Á

CABLE LENGTH (L) TOLERANCES:

L Ò12 [305] = +1 [25] / -0
12 [305] < L Ò60 [1524] = +2 [51] / -0
60 [1524] < L Ò120 [3048] = +4 [102] / -0
120 [3048] < L Ò300 [7620] = +6 [152] / -0
300 [7620] < L = +5%L / -0

ALL DIMENSIONS SHOWN
ARE FOR REFERENCE ONLY.

L-com™
an INFINITE brand
50 High Street, West Mill, 3rd Floor, Suite #30
North Andover, MA 01845 USA.
Phone: 1.800.341.5266 b 1.978.682.6936
Fax: 1.978.689.9484
Website: www.L-com.com
E-mail: CustomerService@L-com.com

THIRD-ANGLE PROJECTION

THE INFORMATION AND
DESIGN IN THIS DOCUMENT
IS THE PROPERTY OF
L-COM GLOBAL CONNECTIVITY.
ALL RIGHTS RESERVED.

SHEET 1 OF 1

SCALE N/A

SIZE	CAGE CODE	DRAWN BY	ITEM NO.	REV
A	43321	BPUCHASKI	NBBWPC121006-KIT	A

THESE COMMODITIES, TECHNOLOGY OR SOFTWARE WERE EXPORTED FROM THE UNITED STATES IN ACCORDANCE WITH THE EXPORT ADMINISTRATION REGULATIONS. DIVERSION CONTRARY TO U.S. LAW PROHIBITED.

T-Rev.D